DATA SHEET

Three Phase Induction Motor - Squirrel Cage

Customer	:

Product line	: Rolled Steel NEMA Premium Efficiency Three-Phase	Product code :	12692798
		Catalog # :	HT020404NPW01

Frame	: 254/6T	Locked rotor time	: 28s (cold) 16s (hot)
Output	: 20 HP (15 kW)	Temperature rise	: 80 K
Poles	: 4	Duty cycle	: Cont.(S1)
Frequency	: 60 Hz	Ambient temperature	: -20°C to +40°C
Rated voltage	: 230/460 V	Altitude	: 1000 m.a.s.l.
Rated current	: 49.4/24.7 A	Protection degree	: IP55
L. R. Amperes	: 331/165 A	Cooling method	: IC411 - TEFC
LRC	: 6.7x(Code H)	Mounting	: F-1
No load current	: 22.2/11.1 A	Rotation¹	: Both (CW and CCW)
Rated speed	: 1765 rpm	Noise level²	: 68.0 dB(A)
Slip	: 1.94 %	Starting method	: Direct On Line
Rated torque	: 59.5 ft.lb	Approx. weight³	: 242 lb
Locked rotor torque	: 270 %		
Breakdown torque	: 300 %		
Insulation class	: F		
Service factor	: 1.15		
Moment of inertia (J)	: 2.64 sq.ft.lb		
Design	: B		

Output	25%	50%	75%	100%
Efficiency (%)	91.0	91.7	92.4	93.0
Power Factor	0.40	0.66	0.77	0.82

Foundation loads	
Max. traction	: 801 lb
Max. compression	: 1043 lb

		Drive end	Non drive end
Bearing type	:	6309 Z C3	6208 Z C3
Sealing	:	V'Ring	V'Ring
Lubrication interval	:	20000 h	20000 h
Lubricant amount	:	13 g	8 g
Lubricant type	:	Mobil Polyrex EM	

Notes
USABLE @208V 54.6A SF 1.00 SFA 54.6A

This revision replaces and cancel the previous one, which must be eliminated.
(1) Looking the motor from the shaft end.
(2) Measured at 1m and with tolerance of +3dB(A).
(3) Approximate weight subject to changes after manufacturing process.
(4) At 100% of full load.

These are average values based on tests with sinusoidal power supply, subject to the tolerances stipulated in NEMA MG-1.

Rev.	Changes Summary	Performed	Checked	Date

Performed by				
Checked by			Page	Revision
Date	13/11/2020		1 / 1	

This document is exclusive property of WEG S/A. Reprinting is not allowed without written authorization of WEG S/A.
Subject to change without notice

No reproduction of this drawing is allowed written permission of WEG Motores

EIXO	
PADRÃO	X
OPCIONAL	
ESPECIAL	

Dimensões em polegada
Dimensions in inches

THIS IS AN UPDATED REVISION, THE PREVIOUS ONE MUST BE DISREGARDED.

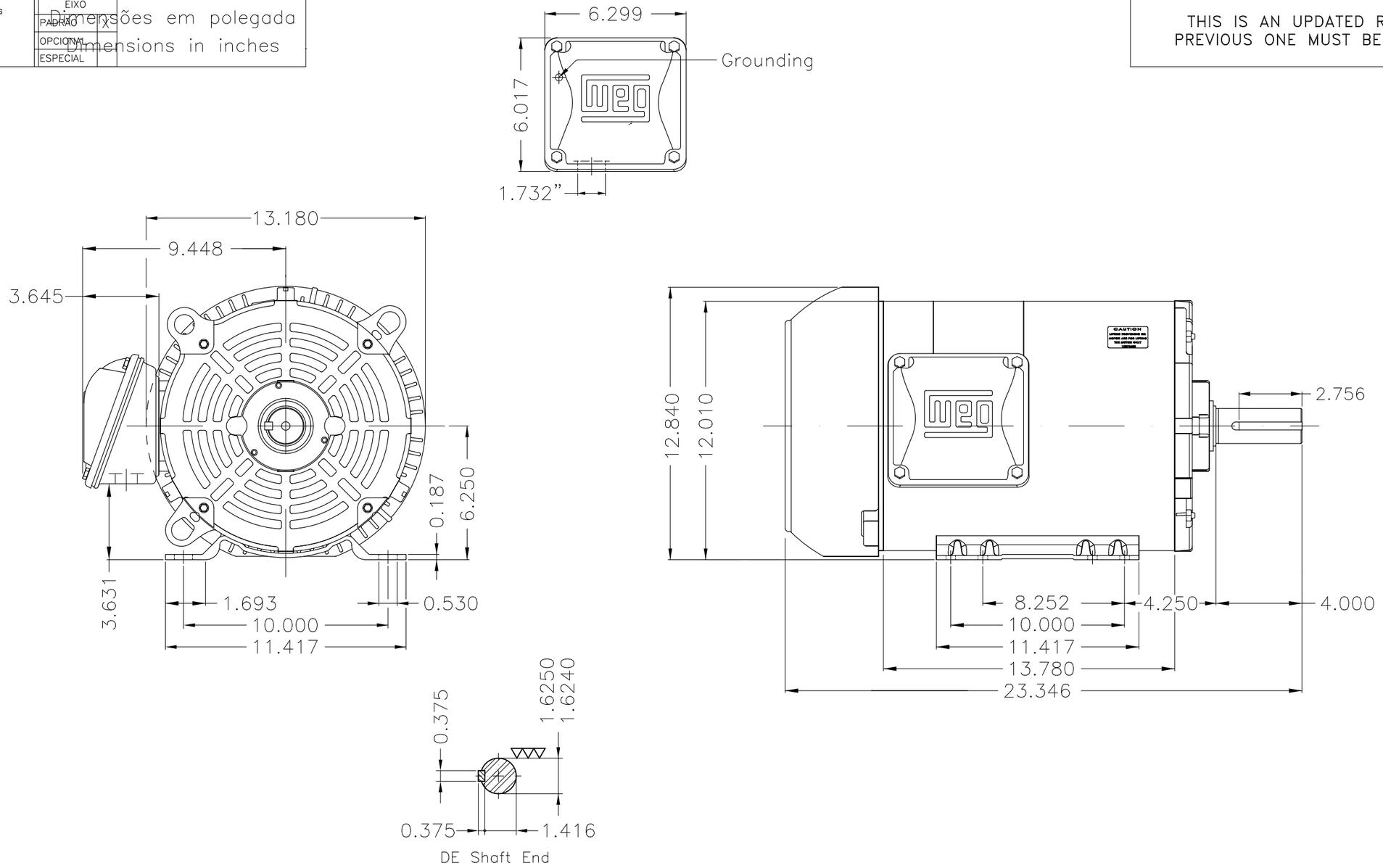

Color Munsell N 1 matte black
Painting plan 207N
Mounting F-1/B3R(D)

ECM	LOC	SUMMARY OF MODIFICATIONS	EXECUTED	CHECKED	RELEASED	DATE	VER

EXECUTED	USERADMIN	THREE P. MOTOR CLOS ROLLED STEEL NEMA PREM	
CHECKED		FRAME 254/6T IP55 TEFC	
RELEASED		WEG code: 12692798	
REL DT	13.11.2020	WMO	Jaragua do Sul Product Engineering

SHEET 1 / 1

20 HP 04 Poles 60Hz

A

ZME A3

WEG's property. Forbidden reproduction without previous authorization.